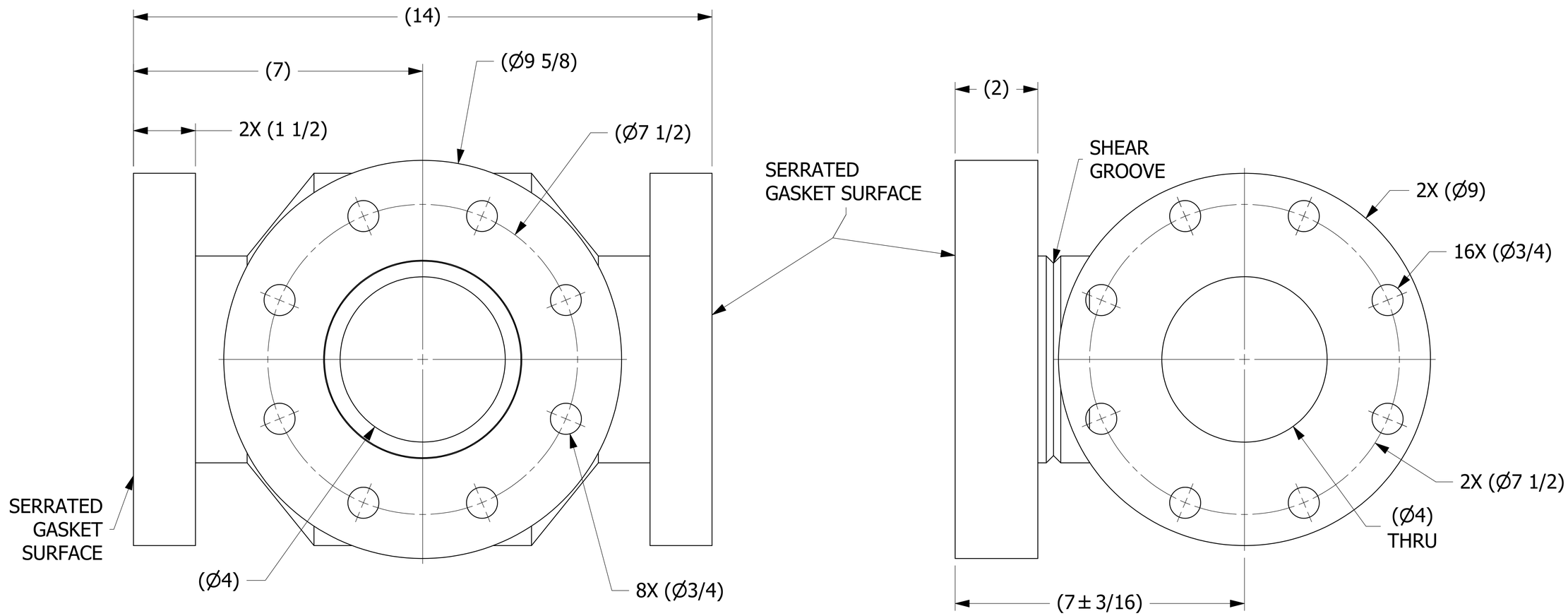

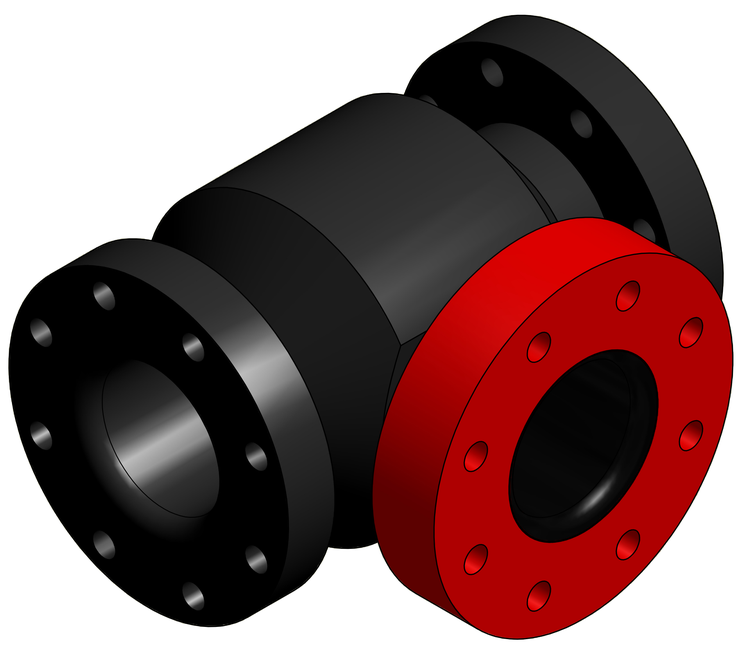

ISOMETRIC VIEW

NOTE:
SOLD TO WORLEY WELDING ONLY.

REV	BY	DATE	DESCRIPTION
E	JG	3-24-16	UPDATED HS4PTB1, NOTES DIMENSIONS
D	KHK	2-20-13	UPDATED TO CURRENT DRAFT STANDARDS, TITLEBLOCK, BOM, WORLEY TEXT. 4.750 WAS 4.765
C	GDS	7-28-11	ADDED MARKING PRESSURE NOTE
B	VD	9-02-10	REPLACED HS958FL W/ HS4FLGS, REV. NOTES.
A	CHL	1-21-10	NEW PART ADDED TO SYSTEM

UNLESS OTHERWISE SPECIFIED DIMENSIONAL TOLERANCES
FRACTIONAL: ±1/16
X.XX: ±.03
X.XXX: ±.015
ANGULAR: ±1°
DEBURR ALL SHARP EDGES.
ALL MACHINED SURFACES TO HAVE A 125 RMS FINISH UNLESS NOTED OTHERWISE.
THIRD ANGLE PROJECTION

DRAWN BY:	REH
CHECKED BY:	VD
PROTOTYPE BY:	REH
PROTOTYPE DATE:	9/2/2009
APPROVED FOR PRODUCTION BY:	VD
PRODUCTION DATE:	9/18/2009

SALCO PRODUCTS, INC.

PART NAME: PIPE TEE 4"

MATERIAL: SALCO PE

PROJECT #: WAG0870 | SHEET #: 1 OF 1 | SCALE: 1:1

DRAWING #: E29382 | PART #: HS4PT1

THIS PRINT, PROPERTY OF SALCO PRODUCTS INC, CONTAINS PROPRIETARY INFORMATION AND MUST NOT BE COPIED, REPRODUCED, OR USED DETRIMENTALLY TO OUR INTEREST.

SALES DRAWING SALES DRAWING
SALES DRAWING SALES DRAWING